ALL DIMENSIONS ARE IN MM UNLESS OTHERWISE SPECIFIED

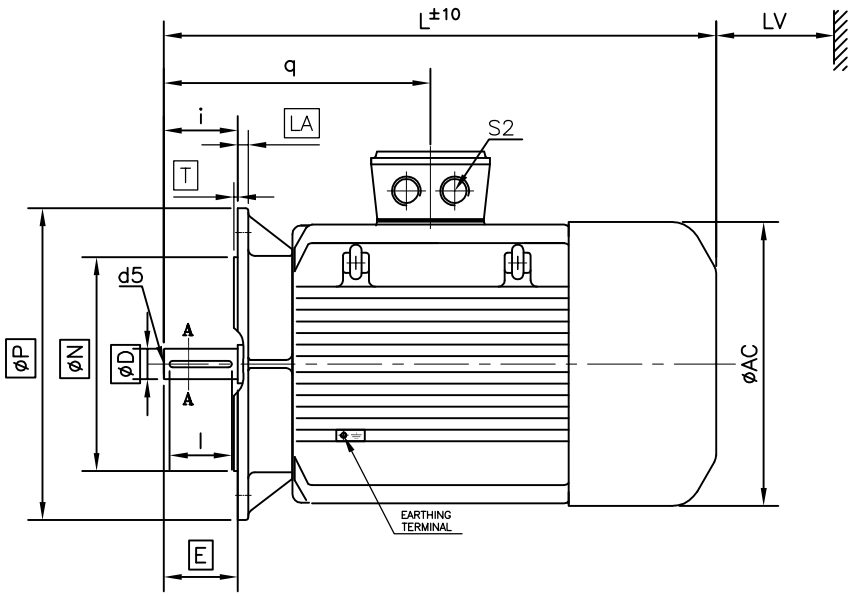

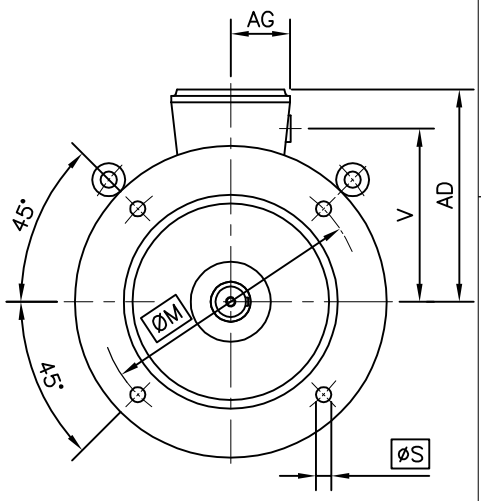

	Fixing					General						T box			
IEC Frame	Pole	øP	øN	øM	i	øS	T	LA	AD	øAC	L	LV	V	q	AG	S2
160M	2	350	250	300	110	19	5	13	223	316	635	60	186	345	63	2x1"BSC

Shaft					
øD	E	F	GA	l	d5
42	110	12	45	105	M16

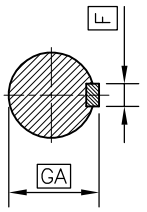

Section A–A

NOTES:–

1) SQUARE ('□') DIMENSIONS ARE AS PER IS:2223.
2) 'LV' IS MINIMUM DISTANCE TO BE MAINTAINED FOR EFFICIENT COOLING.

AMENDMENT					
REV	ZONE	DESCRIPTION		SIGN	DATE

	NAME	DATE	Untolerated dimensions IS:1231 / IS:2223 / IS:2102-1-Very Coarse	TITLE: DIMENSIONAL DRAWING	W.O.NO.	SCALE
DRN	KPB	02.01.2019				NTS
CHD	APH	02.01.2019				
APPD	RSA	02.01.2019				

Bharat Bijlee
AIROLI, NAVI MUMBAI

DRG. NO: A16M25046

REF.

MOUNTING B5

FR. SIZE 160M