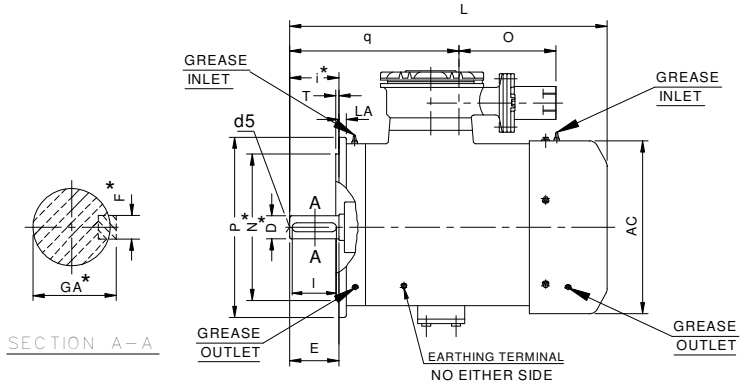

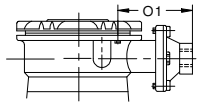

TERMINAL BOX ARRANGEMENT
WITHOUT SEALING BOX

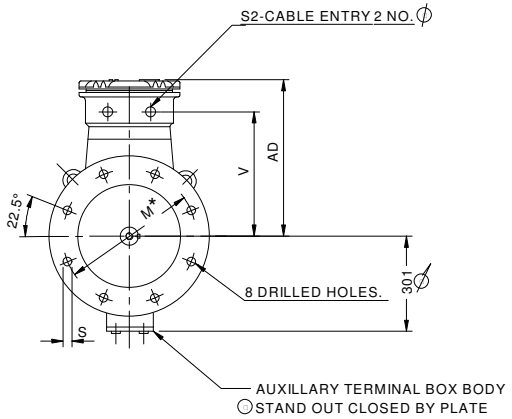

			FIXING					GENERAL					TERMINAL BOX						SHAFT					
IEC Fr. size	BBL Fr. size	Pole	P	N*	M*	i*	S	T	LA	AC	L	AD	V	O	O1	q	S2 ∅	D*	E	F*	GA*	I	d5
280M	MJ280	2	550	450	500	140	19	5	18	544	1010	475	388	252	207	517	M50X1.5P	65	140	18	69	130	M20

Tolerance on Dimensions with*

Dimension	Tolerance	Specification
N	j6	IS : 2223
M	±0.5	
i	±1.5	

Dimension	Tolerance	Specification
D	m6	IS : 1231
GA,F		IS : 2048
d5(centering)		IS : 2540

OVERALL DIMENSIONAL DRAWING

FLAME PROOF (FLANGE MOUNTED) MOTOR

FR.SIZE – 280M

NO. OFF	DESCRIPTION	ITEM NO.	CODE NO.	MATL.	DRG.NO.	PATTERN NO. OR SIZE	WT. kg

AMENDMENT
1. CABLE ENTRY CHANGED AS PER IS/IEC 60079-1-2007 R.R.K 20.02.12
2. AMENDED FOR TIF--VDK--22.07.15.

	DATE	NAME	APRD.
DRN.	01.01.10	V.K.S.	K.M.A
TCD.			
CHD	01.01.10	P.S.A	

TITLE: B 5

W/O.NO.

SCALE

BHARAT BIJLEE LTD.
KALWA

DRG.No. D28M252TC

REF.

FR.SIZE MD280M

TYPE

ALL DIMEMSIONS ARE IN mm. UNLESS OTHERWISE SPECIFIED.