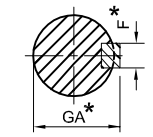

SECTION A–A

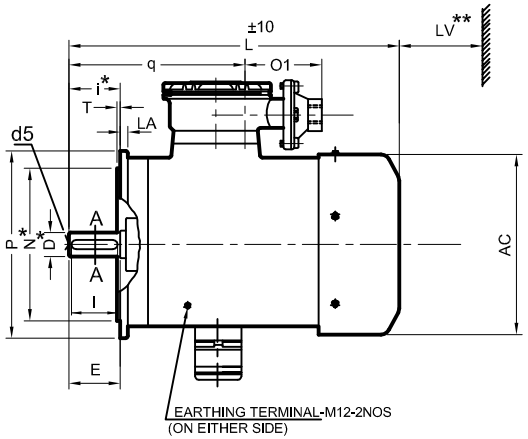

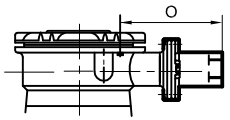

TERMINAL BOX ARRANGEMENT
WITH SEALING BOX

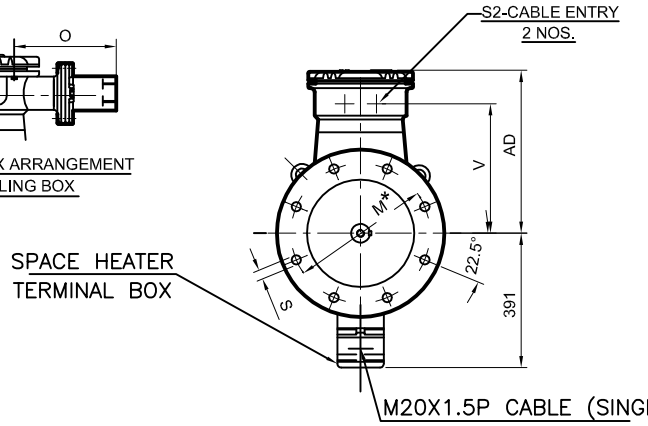

		FIXING					GENERAL						TERMINAL BOX						SHAFT				
IEC Fr. size	Pole	P	N*	M*	i*	S	T	LA	AC	L	LV**	AD	V	O	O1	q	S2	D*	E	F*	GA*	I	d5
315M	2	660	550	600	140	24	6	22	610	1178	130	535	443	276	225	584	M63X1.5P	65	140	18	69	130	M20

OVERALL DIMENSIONAL DRAWING TOP T.BOX
FLAME PROOF (FLANGE MOUNTED) MOTOR
FR.SIZE–315M

NO. OFF	DESCRIPTION	ITEM NO.	CODE NO.	MATL.	DRG.NO.	PATTERN NO. OR SIZE	WT. kg
		AMEND-MENT					

	DATE	NAME	APRD.	TITLE	SCALE
DRN.	22.07.10	ASS	K.M.A	B5	
TCD.					
CHD.	22.07.10	KMA			

BHARAT BIJLEE LTD.
KALWA

DRG.No. D31M251TC

FR.SIZE 315M

REF.

TYPE

Tolerance on Dimensions with *

Dimension	Tolerance	Specification
N	j6	IS : 2223
M	±0.5	
i	±1.5	

Dimension	Tolerance	Specification
D	m6	IS : 1231
GA,F		IS : 2048
d5(centering)		IS : 2540

ALL DIMEMSIONS ARE IN mm. UNLESS OTHERWISE SPECIFIED.