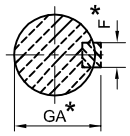

SECTION A–A

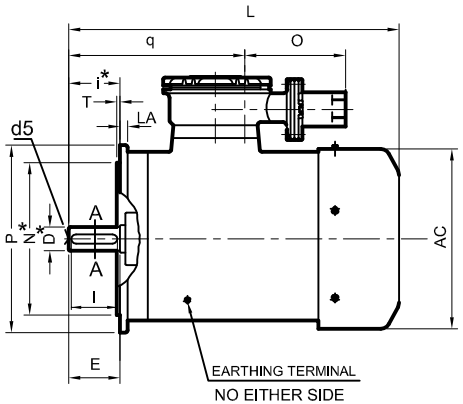

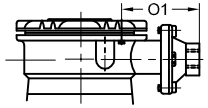

TERMINAL BOX ARRANGEMENT
WITHOUT SEALING BOX

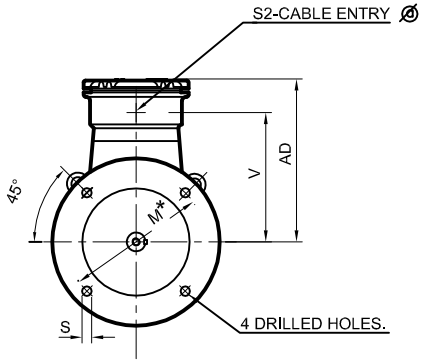

			FIXING					GENERAL					TERMINAL BOX						SHAFT					
IEC Fr. size	BBL Fr. size	Pole	P	N*	M*	i*	S	T	LA	AC	L	AD	V	O	O1	q	S2 Ø	D*	E	F*	GA*	I	d5
112M	MJ112	2,4,6&8	250	180	215	60	15	4	12	220	456	262	204	200	124	233	M25X1.5P	28	60	8	31	55	M10

MAIN T.BOX
CABLE SIZE :– 1RX3CX16mmsq.
FOR AYFY ARMOURED CABLE 650V

OVERALL DIMENSIONAL DRAWING
FLAME PROOF (FLANGE MOUNTED) MOTOR
FR.SIZE–112M

Tolerance on Dimensions with *

Dimension	Tolerance	Specification
N	j6	IS : 2223
M	±0.3	
i	±1	

Dimension	Tolerance	Specification
D,DA	j6	IS : 1231
GA,GC,F,FA		IS : 2048
d5(centering)		IS : 2540

NO. OFF	DESCRIPTION	ITEM NO.	CODE NO.	MATL.	DRG.NO.	PATTERN NO. OR SIZE	WT. kg

AMEND-MENT
ⓐ CABLE ENTRY CHANGED AS PER IS/IEC 60079-1-2007 R.B.K 20.02.12
ⓑ AMENDED FOR TIF--VDK--22.07.15.

	DATE	NAME	APRD.	TITLE	W/O.NO.	SCALE
DRN.	01.01.10	V.K.S.	K.M.A	B5		/
TCD.						
CHD.	01.01.10	P.S.A				

BHARAT BIJLEE LTD.
KALWA

DRG.No. D11M452TC Øⓑ
REF.
FR.SIZE MD112M
TYPE

ALL DIMEMSIONS ARE IN mm. UNLESS OTHERWISE SPECIFIED.